Double regulating and commissioning valves
“Hycocon VTZ/VPZ”
“eco” measuring technique

Oventrop double regulating and commissioning valves “Hycocon VTZ/VPZ” are installed in the pipework of hot water central heating systems and cooling systems and serve to achieve a hydronic balance between the various circuits of the system.

The balance is achieved by a presetting with memory lock.

The required values of presetting can be obtained from the flow charts. All intermediate values are infinitely adjustable.

The selected presetting can be read off two scales (basic scale and fine adjustment scale, see chapter presetting). The

Oventrop double regulating and commissioning valves have two integrated pressure test points and drain valves which may be equipped with a fill and drain tool with hose connection or measuring needles for the measurement of the differential pressure. The double regulating and commissioning valves are delivered with mounted pressure test points, drain valves and caps.

The double regulating and commissioning valves may be installed in either the supply or the return pipe.

When installing the valve it must be ensured that the direction of flow conforms to the direction of the arrow on the valve body and that the valve is installed with a minimum of L = 3 x Ø of straight pipe in the upstream side.

The pipework has to be flushed thoroughly before installing the valve. The installation of an Oventrop “y” type strainer is recommended.

The flow charts are valid for installation of the double regulating and commissioning valves in the supply or the return pipe, provided the direction of flow conforms to the arrow on the valve body.

In cooling systems using mixtures of water and glycol, the correction factors related to the indicated chart values have to be taken into consideration. When using the flow-meter “OV-DMC 2”, the percentage of the water and glycol mixture has to be entered. The conversion is carried out by the computer. The universal bonnet connection (M 30 x 1.5) does not only allow a conversion of the double regulating and commissioning valve to thermostatic operation (e.g. “Uni XH”) but it may also be equipped with an actuator. For use with chilled ceiling elements, bus application electromotive actuators (“Uni EIB/LON”) may also be used. Size DN 50 can be converted to receive a differential pressure regulator bonnet. The system has to be drained for this purpose.

Advantages:

- the location of the functional components in one plane allows a simple assembly and easy operation
- only <u>one</u> valve for 5 functions
  presetting
  measuring
  isolating
  filling
  draining
- supplied with mounted pressure test points and drain valves
- infinitely adjustable, reproducible, lockable and lead sealable presetting, exact measurement of pressure loss and flow via the pressure test points
- female threads according to EN 10226 (BS 21) suitable for Oventrop compression fittings (1027151-58) for copper pipes with a max. diameter of 22 mm and the Oventrop composition pipe “Copipe” 14 and 16 mm or flat sealing with male threads and collar nut or press connection
- easy filling and draining by screwing a separate tool (accessory) onto the measuring nipples

“Hycocon VTZ”

Possible combinations “Hycocon VTZ”, “Hycocon ATZ” and “Hycocon DTZ” for hydronic balancing

Other possible combinations “Hycocon ETZ” and “Hycocon HZT” with valve inserts and actuators or thermostats

Double regulating and commissioning valves
“Hycocon VTZ/VPZ”

Tender specification:

Double regulating and commissioning valve PN 16 for hot water central heating and cooling systems. Straight pattern model with secured, infinitely adjustable fine presetting controllable at any time; optical display of the presetting depending on the position of the handwheel, valve body and other parts coming into contact with the fluid made of brass resistant to de-zincification (DZR), disc with PTFE soft seal, maintenance-free stem seal due to double O-ring, all functional components in one plane, with two integrated pressure test points, drain valves and caps, installation in the supply or the return pipe.

Connection thread M 30 x 1.5.

Suitable for the connection of thermostats (e.g. “Uni XH”), actuators (e.g. electromotive actuators “Uni EIB/LON”) and a differential pressure regulator bonnet without draining the system (conversion of DN 15, DN 20 and DN 25 with the help of the “Demo-Bloc”). The valves are supplied with an insulation for temperatures up to 80 °C (as packaging). For the sizes DN 15 up to DN 40, Oventrop offers a separate insulation for temperatures up to 120 °C. When equipped with additional polystyrene shells, both insulations may be used for cooling systems.

Double regulating and commissioning valves with integrated pressure test points and drain valves (with captive caps)

Technical data:

Max. operating temperature t_s: +120 °C
Min. operating temperature t_s: -10 °C
Max. operating pressure p_s: 16 bar (PN 16)

Models:

“Hycocon VTZ”:

both ports female thread according to EN 10226 (BS 21)

Size	k_{vs}-value	Item no.
DN 15	1.7	1061704
DN 20	2.7	1061706
DN 25	3.6	1061708
DN 32	6.8	1061710
DN 40	10.0	1061712
DN 50	18.0	1061716

“Hycocon VPZ”:

both ports bronze press connection

Size	k_{vs}-value		Item no.
DN 15	1.7	15 mm	1061751
DN 15	1.7	18 mm	1061752
DN 20	2.7	22 mm	1061754
DN 25	3.6	25 mm	1061756
DN 32	6.8	35 mm	1061758
DN 40	10.0	42 mm	1061760

For the direct connection of copper pipe pipes according to EN 1057/DVGW GW 392, stainless steel pipes according to EN 10088/DVGW 541 and thin-walled C-steel pipes (material no. E 195/1.0034) according to EN 10305-3. Pressing must be carried out to tighten the connection. Only use press jaws with the original contours SANHA (SA), Geberit-Mapress (MM) or Viega (Profipress). Processing must be carried out according to the installation instructions.

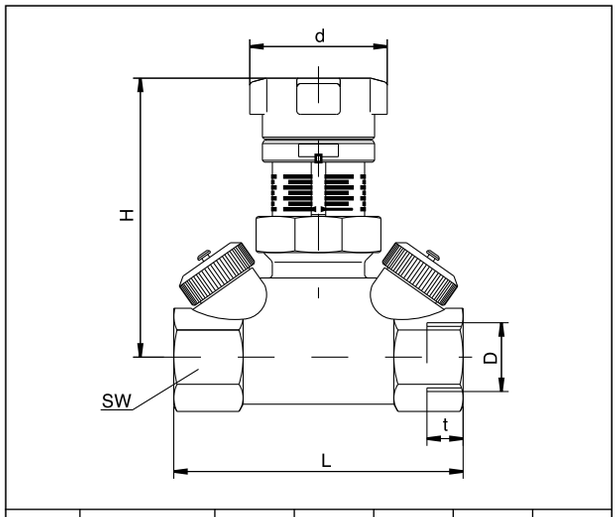

DN	D EN 10226	t	SW*	L	H	d
15	Rp ½	13.2	27	80	77	38
20	Rp ¾	14.5	32	82	79	38
25	Rp 1	16.8	41	92	81	38
32	Rp 1¼	19.1	50	115	91	50
40	Rp 1½	19.1	55	130	100	50
50	Rp 2	25.7	70	140	104	50

Dimensions “Hycocon VTZ” *SW = spanner size

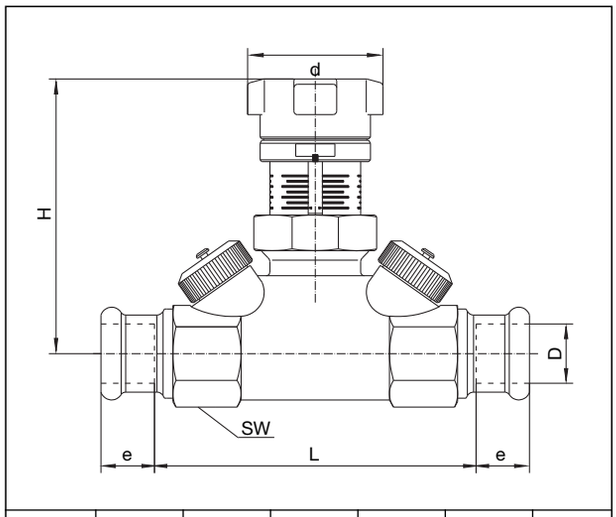

DN	D	e	SW*	L	H	d
15	15	18	27	85	77	38
15	18	20	27	85	77	38
20	22	24	32	89	79	38
25	28	27	41	99	81	38
32	35	32	50	124	91	50
40	42	37.5	55	139	100	50

Dimensions “Hycocon VPZ” *SW = spanner size

“Hycocon VTZ”:
both ports male thread and collar nut

Size	k_{VS}-value	Item no.
DN 15	1.7	1061804
DN 20	2.7	1061806
DN 25	3.6	1061808
DN 32	6.8	1061810
DN 40	10.0	1061812
DN 50	18.0	1061816

Accessories:

Fill and drain tool	1061791
Locking pin	1061792

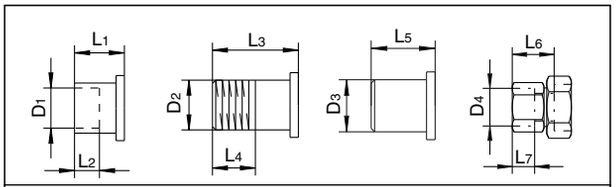

DN	D_1	L_1	L_2	D_2 EN 10226	L_3	L_4	D_3	L_5	D_4 EN 10226	L_6	L_7
15	15	18	12	R ½	31	13.2	20.5	50	Rp ½	37	13.2
20	18	23	15	R ¾	34	14.5	26	50	Rp ¾	38	14.5
20	22	24	17	–	–	–	–	–	–	–	–
25	28	27	20	R 1	40	16.8	33	60	Rp 1	53	16.8
32	35	32	25	R 1¼	46	19.1	41	60	Rp 1¼	55	19.1
40	42	37	29	R 1½	49	19.1	47.5	65	–	–	–
50	54	50	40	R 2	55	23.4	60	65	–	–	–

Dimensions

Presetting:

1. The value of presetting of the valve is set by turning the handwheel.
   a. The display of the basic setting is shown by the longitudinal scale together with the sliding indicator. Each turn of the handwheel is represented by a line on the longitudinal scale.
   b. The display of the fine setting is shown by the peripheral scale on the handwheel together with the marking. The subdivisions of the peripheral scale correspond to 1/10th of a turn of the handwheel.
2. Limitation of the set value of presetting by turning the inner adjustment stem clockwise up to the limit stop. This can be done by using a screwdriver with a bezel of about 3 to 4 mm.
3. The value of presetting may be locked by using the locking pin (accessory).

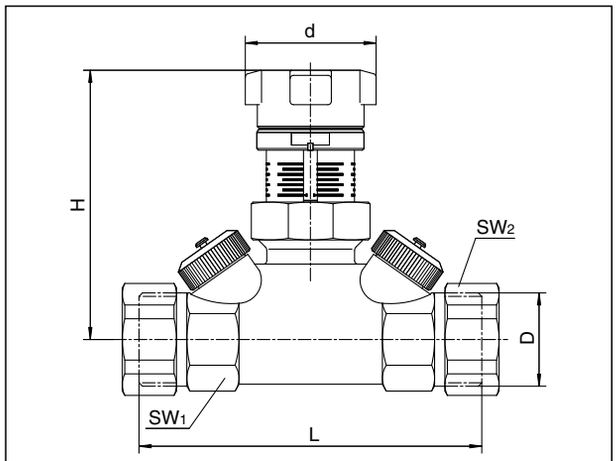

DN	D ISO 228	L	H	SW_1*	SW_2*	d
15	G ¾	95	77	27	30	38
20	G 1	98	79	32	37	38
25	G 1¼	105	81	41	46	38
32	G 1½	129	91	50	52	50
40	G 1¾	145	100	55	58	50
50	G 2⅜	148	104	70	75	50

Dimensions *SW = spanner size

Tailpipe sets:

2 weldable tailpipes		Item no.
for valve DN 15		1060592
for valve DN 20		1060593
for valve DN 25		1060594
for valve DN 32		1060595
for valve DN 40		1060596
for valve DN 50		1060597
2 solder tailpipes		
15 mm	for valve DN 15	1061092
18 mm	for valve DN 20	1061093
22 mm	for valve DN 20	1061094
28 mm	for valve DN 25	1061095
35 mm	for valve DN 32	1061096
42 mm	for valve DN 40	1061097
54 mm	for valve DN 50	1061098
2 tailpipes with male thread		
R ½	for valve DN 15	1061492
R ¾	for valve DN 20	1061493
R 1	for valve DN 25	1061494
R 1¼	for valve DN 32	1061495
R 1½	for valve DN 40	1061496
R 2	for valve DN 50	1061497
2 tailpipes with female thread		
Rp ½	for valve DN 15	1061392
Rp ¾	for valve DN 20	1061393
Rp 1	for valve DN 25	1061394
Rp 1¼	for valve DN 32	1061395

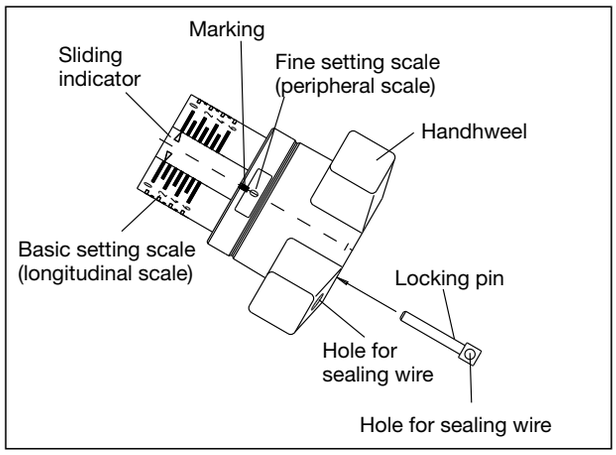

“Hycocon VTZ/VPZ”:

DN 15

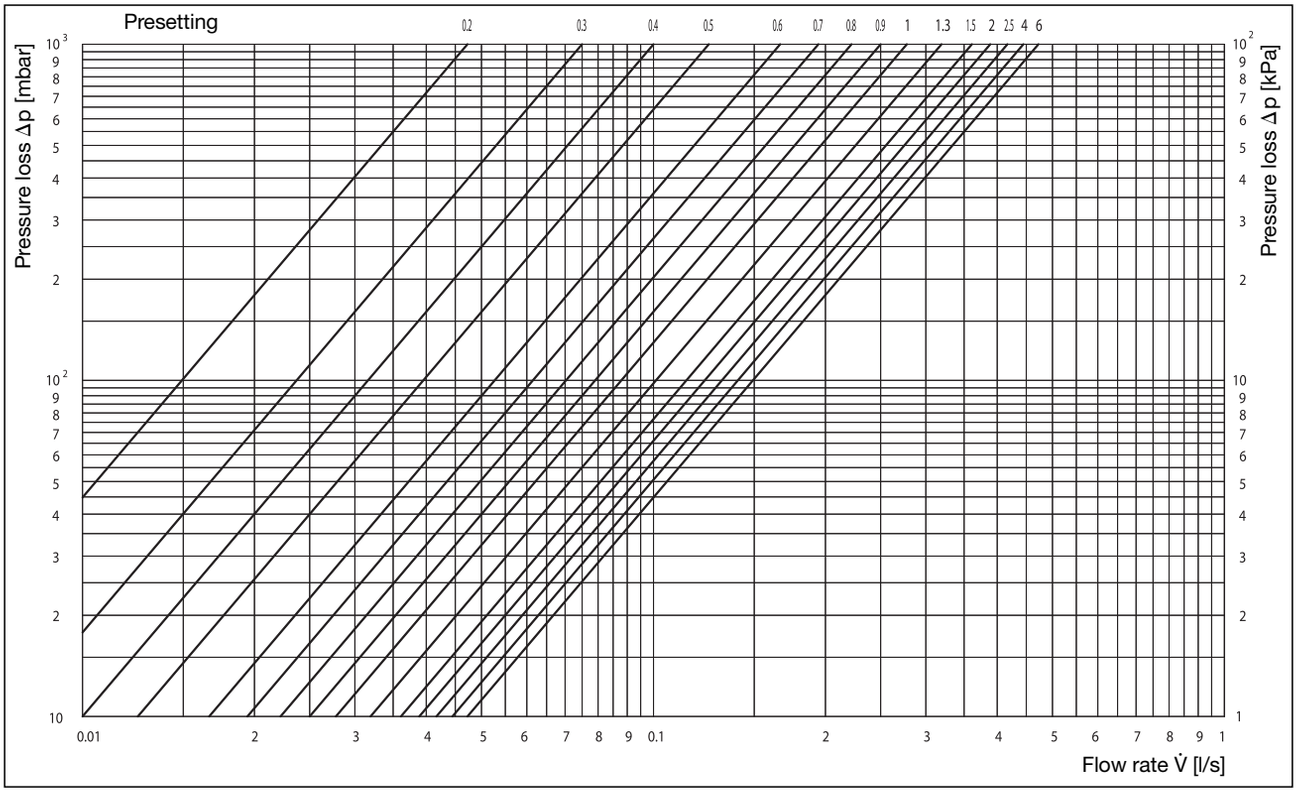

DN 20

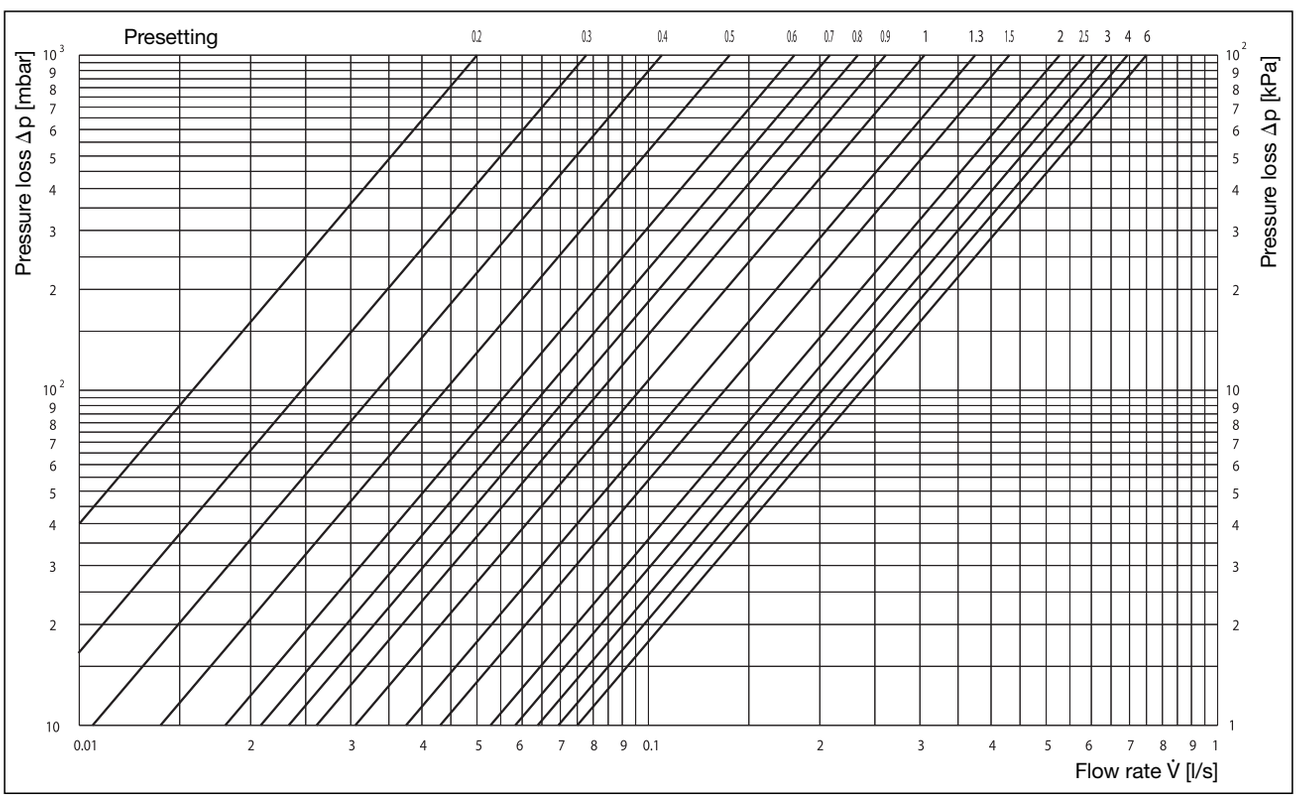

DN 25

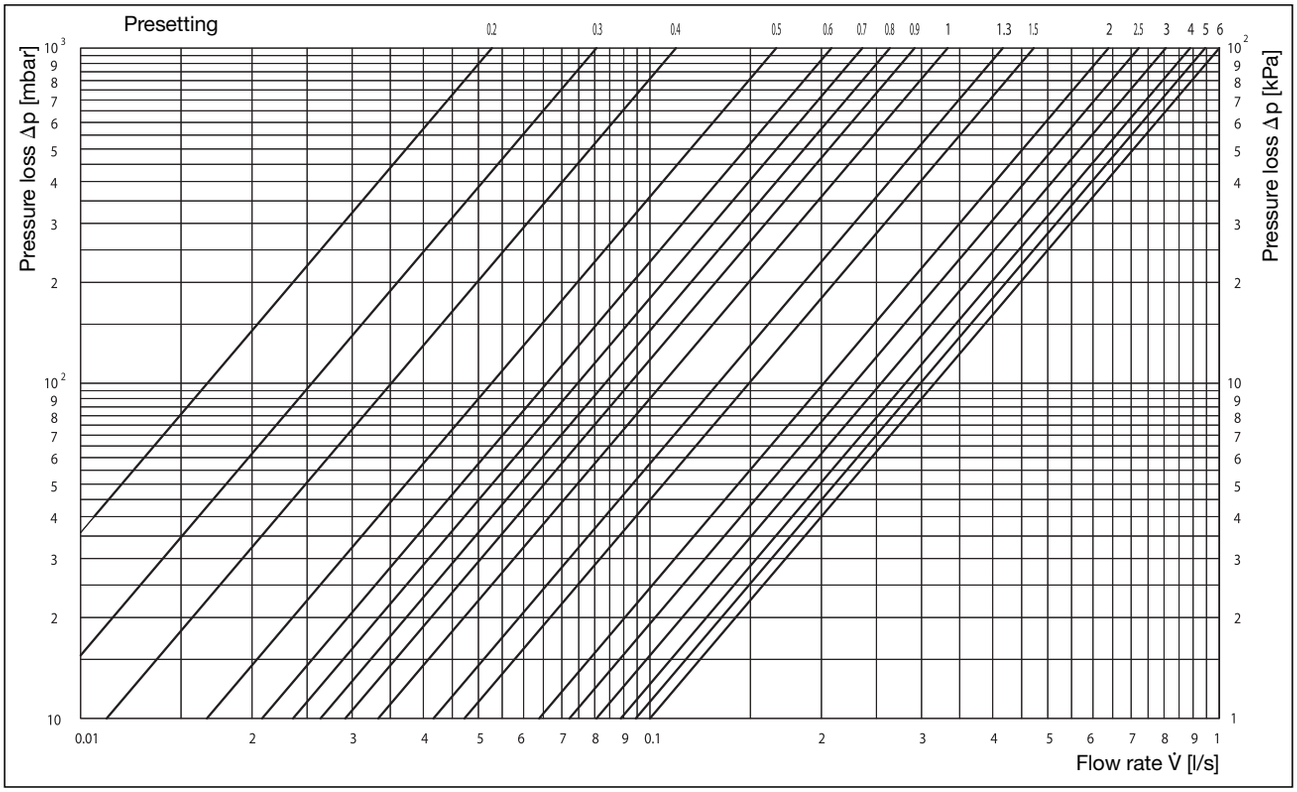
Presetting
0.2
0.3
0.4
0.5
0.6
0.7
0.8
0.9
1
1.3
1.5
2
2.5
3
4
5
6
Pressure loss Δp [mbar]
Pressure loss Δp [kPa]
Flow rate V̇ [l/s]

DN 32

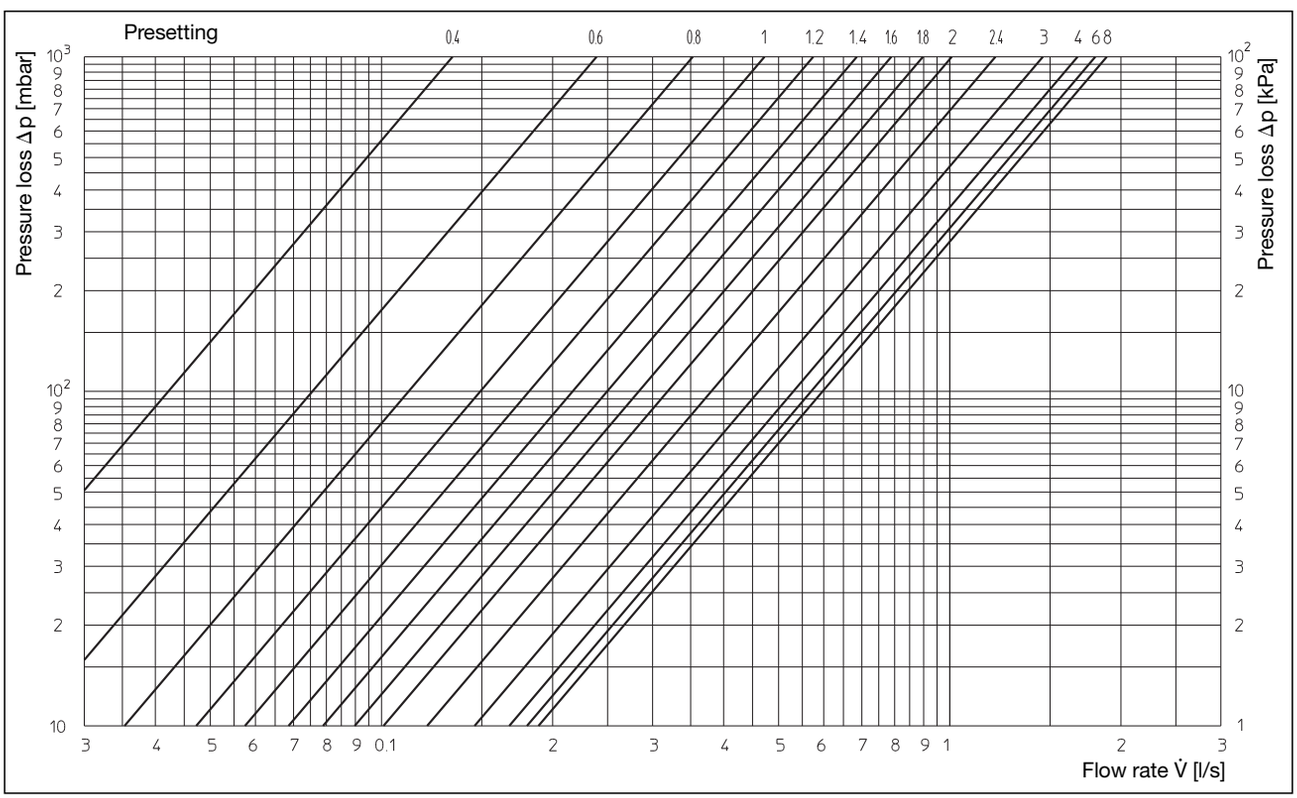
Presetting
0.4
0.6
0.8
1
1.2
1.4
1.6
1.8
2
2.4
3
4
6
8
Pressure loss Δp [mbar]
Pressure loss Δp [kPa]
Flow rate V̇ [l/s]

DN 40

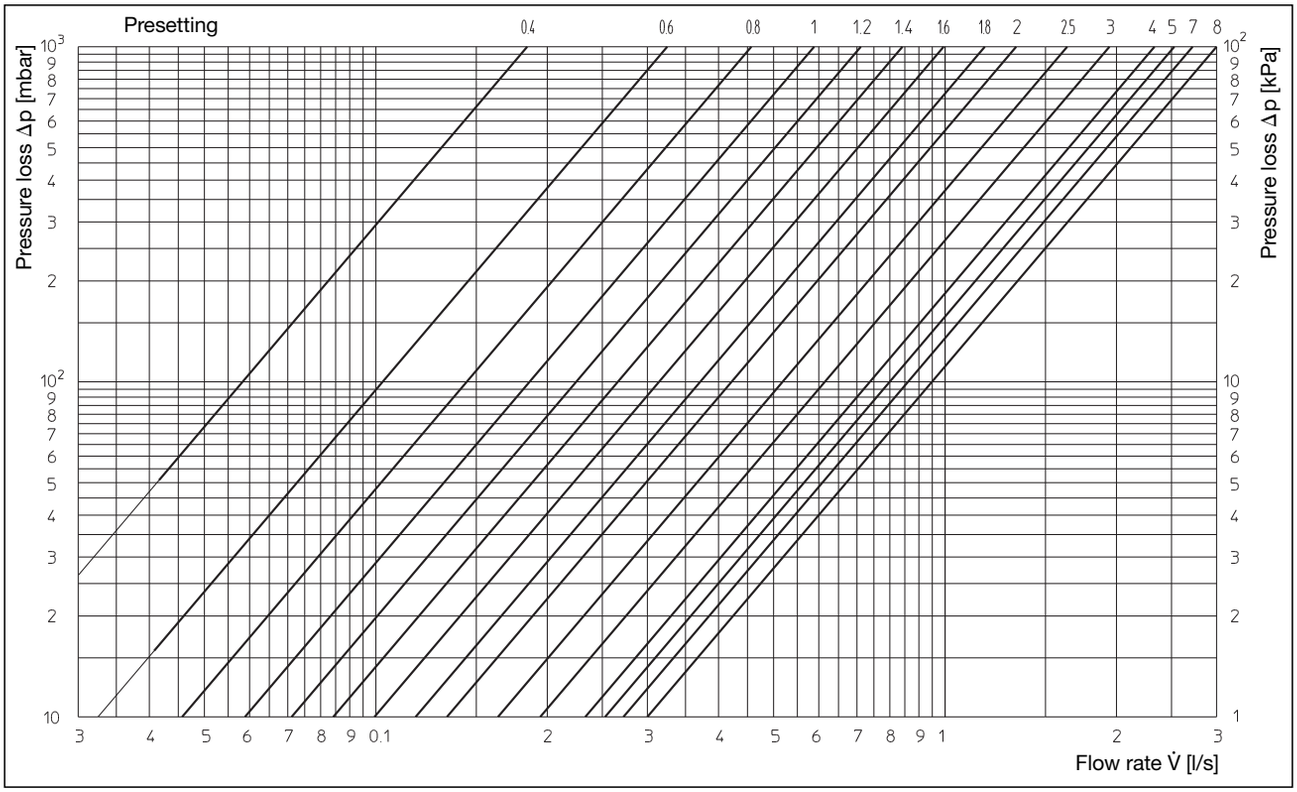

DN 50

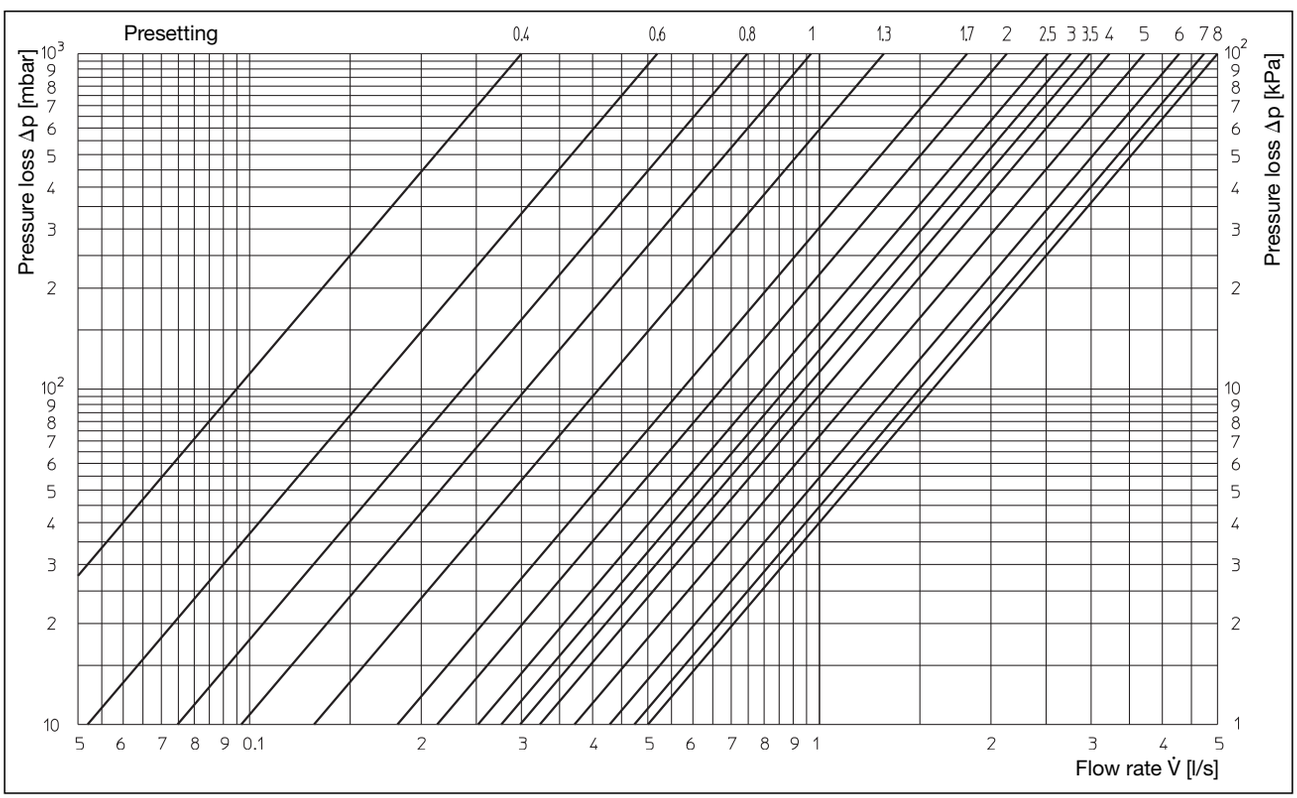

Performance data:

“Hycocon VTZ/VPZ”	DN 15		DN 20		DN 25		DN 32		DN 40		DN 50	
Presetting	kv-value	Zeta-value	kv-value	Zeta-value	kv-value	Zeta-value	kv-value	Zeta-value	kv-value	Zeta-value	kv-value	Zeta-value
0.3	0.11	8352	0.13	19863	0.16	32973						
0.4	0.23	1910	0.25	5371	0.27	11579	0.48	11118	0.67	10488	1.08	10524
0.5	0.34	874	0.36	2590	0.39	5550	0.70	5228	0.95	5216	1.47	5626
0.6	0.45	499	0.48	1457	0.51	3245	0.85	3545	1.17	3439	1.87	3494
0.7	0.55	334	0.6	932	0.63	2127	1.10	2117	1.41	2368	2.26	2379
0.8	0.66	232	0.72	648	0.75	1501	1.30	1516	1.65	1729	2.69	1683
0.9	0.76	175	0.84	476	0.87	1115	1.52	1109	1.88	1332	3.05	1306
1.0	0.86	137	0.94	380	1.00	844	1.70	886	2.10	1068	3.48	1005
1.1	0.97	107	1.02	323	1.10	698	1.90	710	2.33	867	3.89	803
1.2	1.03	95	1.10	277	1.20	586	2.10	581	2.56	718	4.28	664
1.3	1.10	84	1.20	233	1.30	499	2.30	484	2.80	600	4.67	558
1.4	1.16	75	1.30	199	1.40	431	2.50	410	3.05	506	5.19	452
1.5	1.22	68	1.40	171	1.50	375	2.70	351	3.30	432	5.65	381
1.6	1.26	64	1.51	147	1.60	330	2.85	315	3.57	369	6.09	328
1.7	1.31	59	1.62	128	1.70	292	3.01	283	3.90	310	6.54	285
1.8	1.36	55	1.68	119	1.80	261	3.20	250	4.25	261	6.92	254
1.9	1.41	51	1.74	111	1.90	234	3.40	222	4.55	227	7.30	228
2.0	1.46	47	1.80	104	2.0	211	3.60	198	4.80	204	7.68	206
2.1	1.50	45	1.86	97	2.10	191	3.81	176	5.01	188	7.98	191
2.2	1.53	43	1.93	90	2.21	173	4.02	159	5.20	174	8.33	175
2.3	1.55	42	1.99	85	2.31	158	4.22	144	5.41	161	8.62	164
2.4	1.57	41	2.05	80	2.41	145	4.33	137	5.65	147	8.86	155
2.5	1.58	40	2.10	76	2.50	135	4.60	121	5.90	135	9.06	148
2.6	1.59	40	2.14	73	2.58	127	4.76	113	6.15	124	9.27	142
2.7	1.60	39	2.18	71	2.64	121	4.90	107	6.38	116	9.45	136
2.8	1.61	39	2.21	69	2.70	116	5.00	102	6.60	108	9.62	131
2.9	1.62	39	2.23	68	2.75	112	5.15	97	6.80	102	9.84	126
3.0	1.63	38	2.25	66	2.80	108	5.25	93	7.00	96	9.95	123
3.5	1.65	37	2.33	62	2.98	95	5.69	79	7.85	76	10.74	106
4.0	1.66	37	2.40	58	3.10	88	6.00	71	8.40	67	11.63	90
4.5	1.67	36	2.47	55	3.20	82	6.18	67	8.80	61	12.60	77
5.0	1.68	36	2.55	52	3.30	78	6.30	65	9.10	57	13.38	68
5.5	1.69	35	2.63	49	3.43	72	6.40	63	9.35	54	14.30	60
6.0	1.70	35	2.70	46	3.60	65	6.50	61	9.50	52	15.42	51
6.5							6.58	59	9.65	51	16.32	46
7.0							6.65	58	9.80	49	17.04	42
7.5							6.72	57	9.90	48	17.67	39
8.0							6.80	55	10.00	47	18.00	38

Isolating and orifice valves “Hycocon ATZ/APZ”
“eco” measuring technique

Oventrop isolating and orifice valves “Hycocon ATZ/APZ” are installed in the pipework of hot water central heating systems and cooling systems and serve to achieve an isolation of the pipework.

The Oventrop isolating and orifice valves have two integrated pressure test points and drain valves which may be equipped with a fill and drain tool with hose connection or measuring needles for the measurement of the differential pressure.

The isolating and orifice valves may be installed in either the supply or the return pipe.

Conversion to double regulating and commissioning valves is possible by replacing the handwheel group.

Moreover, the inserts of the sizes DN 15 to DN 25 can be replaced with the help of the “Demo-Bloc” without draining the system and can be converted to receive an actuator or a differential pressure regulator bonnet.

Tender specification:

Isolating and orifice valve PN 16 for hot water central heating and cooling systems. Straight pattern model. Valve body, bonnet and other parts coming into contact with the fluid made of brass resistant to de-zincification (DZR), disc with PTFE soft seal, maintenance-free stem seal due to double O-ring.
Installation in the supply or the return pipe. With two integrated pressure test points, drain valves and caps.

Connection thread M 30 x 1.5.

Suitable for the connection of thermostats (e.g. “Uni XH”), actuators (e.g. electromotive actuators “Uni EIB/LON”) and a differential pressure regulator bonnet. To do so, the bonnet has to be replaced (by using the “Demo-Bloc” 1188051 or draining the system).

The valves are supplied with an insulation for temperatures up to 80 °C (as packaging). For the sizes DN 15 up to DN 40, Oventrop offers a separate insulation for temperatures up to 120 °C. When equipped with additional polystyrene shells, both insulations may be used for cooling systems.

Technical data:

Max. operating temperature t_s: +120 °C
Min. operating temperature t_s: -10 °C
Max. operating pressure p_s: 16 bar (PN 16)

Models:

“Hycocon ATZ”:

both ports female thread according to EN 10226 (BS 21)

Size	k_{vs}-value	Item no.
DN 15	1.7	1067304
DN 20	2.7	1067306
DN 25	3.6	1067308
DN 32	6.8	1067310
DN 40	10.0	1067312
DN 50	18.0	1067316

“Hycocon APZ”:

both ports bronze press connection

Size	k_{vs}-value		Item no.
DN 15	1.7	15 mm	1067351
DN 15	1.7	18 mm	1067352
DN 20	2.7	22 mm	1067354
DN 25	3.6	25 mm	1067356
DN 32	6.8	35 mm	1067358
DN 40	10.0	42 mm	1067360

For the direct connection of copper pipe pipes according to EN 1057/DVGW GW 392, stainless steel pipes according to EN 10088/DVGW 541 and thin-walled C-steel pipes (material no. E 195/1.0034) according to EN 10305-3. Pressing must be carried out to tighten the connection. Only use press jaws with the original contours SANHA (SA), Geberit-Mapress (MM) or Viega (Profipress). Processing must be carried out according to the installation instructions.

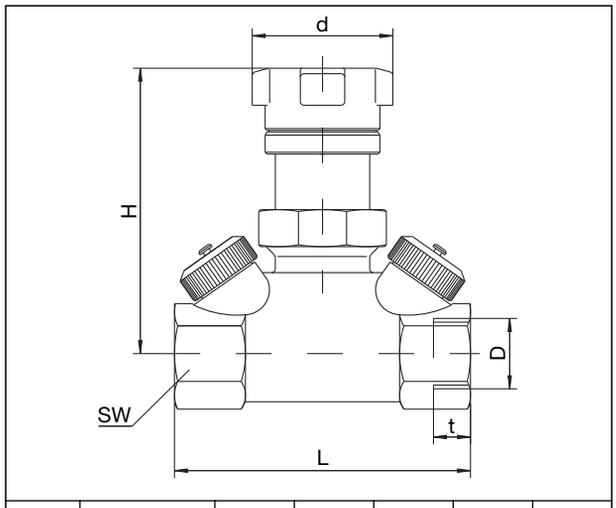

DN	D EN 10226	t	SW*	L	H	d
15	Rp ½	13.2	27	80	77	38
20	Rp ¾	14.5	32	82	79	38
25	Rp 1	16.8	41	92	81	38
32	Rp 1¼	19.1	50	115	91	50
40	Rp 1½	19.1	55	130	100	50
50	Rp 2	25.7	70	140	104	50

Dimensions “Hycocon ATZ” *SW = spanner size

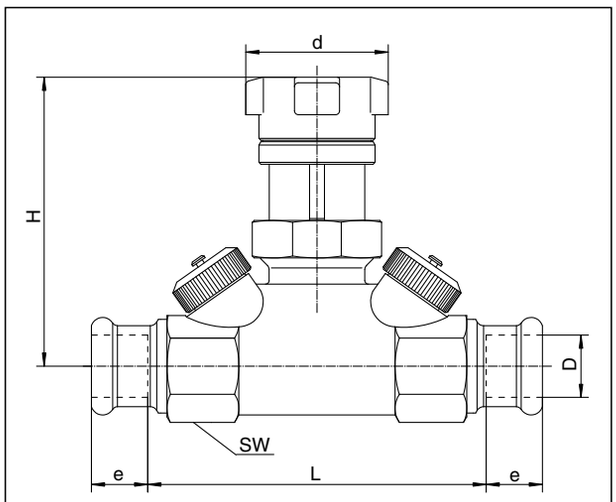

DN	D	e	SW*	L	H	d
15	15	18	27	85	77	38
15	18	20	27	85	77	38
20	22	24	32	89	79	38
25	28	27	41	99	81	38
32	35	32	50	124	91	50
40	42	37.5	55	139	100	50

Dimensions “Hycocon APZ” *SW = spanner size

“Hycocon ATZ”:

both ports male thread and collar nut

Size	k_{vs}-value	Item no.
DN 15	1.7	1067404
DN 20	2.7	1067406
DN 25	3.6	1067408
DN 32	6.8	1067410
DN 40	10.0	1067412
DN 50	18.0	1067416

Accessory:

Fill and drain tool	1061791

Tailpipe sets:

2 weldable tailpipes

for valve DN 15	1060592
for valve DN 20	1060593
for valve DN 25	1060594
for valve DN 32	1060595
for valve DN 40	1060596
for valve DN 50	1060597

2 solder tailpipes

15 mm	for valve DN 15	1061092
18 mm	for valve DN 20	1061093
22 mm	for valve DN 20	1061094
28 mm	for valve DN 25	1061095
35 mm	for valve DN 32	1061096
42 mm	for valve DN 40	1061097
54 mm	for valve DN 50	1061098

2 tailpipes with male thread

R ½	for valve DN 15	1061492
R ¾	for valve DN 20	1061493
R 1	for valve DN 25	1061494
R 1¼	for valve DN 32	1061495
R 1½	for valve DN 40	1061496
R 2	for valve DN 50	1061497

2 tailpipes with female thread

Rp ½	for valve DN 15	1061392
Rp ¾	for valve DN 20	1061393
Rp 1	for valve DN 25	1061394
Rp 1¼	for valve DN 32	1061395

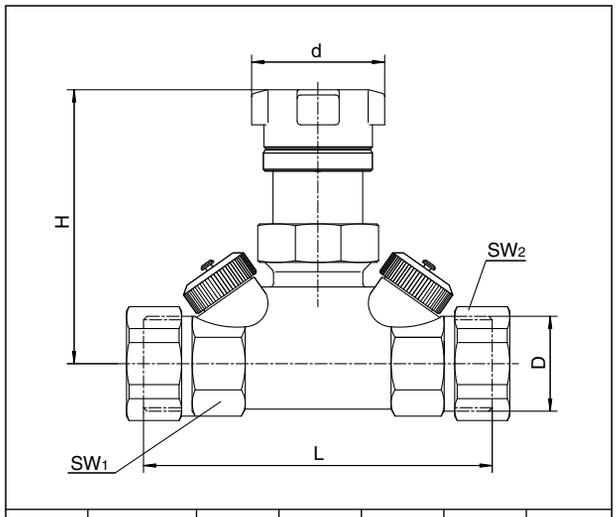

DN	D ISO 228	L	H	SW1*	SW2*	d
15	G ¾	95	77	27	30	38
20	G 1	98	79	32	37	38
25	G 1¼	105	81	41	46	38
32	G 1½	129	91	50	52	50
40	G 1¾	145	100	55	58	50
50	G 2⅜	148	104	70	75	50

Dimensions *SW = spanner size

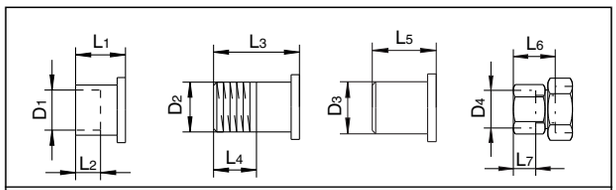

DN	D_1	L_1	L_2	D_2 DIN EN 10226	L_3	L_4	D_3	L_5	D_4 DIN EN 10226	L_6	L_7
15	15	18	12	R ½	31	13.2	20.5	50	Rp ½	37	13.2
20	18	23	15	R ¾	34	14.5	26	50	Rp ¾	38	14.5
20	22	24	17	–	–	–	–	–	–	–	–
25	28	27	20	R 1	40	16.8	33	60	Rp 1	53	16.8
32	35	32	25	R 1¼	46	19.1	41	60	Rp 1¼	55	19.1
40	42	37	29	R 1½	49	19.1	47.5	65	–	–	–
50	54	50	40	R 2	55	23.4	60	65	–	–	–

Dimensions

Regulating valves “Hycocon ETZ” and “Hycocon HTZ” for subsequent conversion to thermostatic operation “eco” measuring technique

Function:

Oventrop regulating valves “Hycocon ETZ” and “Hycocon HTZ” are installed in the pipework of hot water central heating systems and cooling systems and serve to achieve a hydronic balance between the various circuits of the systems. They can also be combined with thermostatic or electric actuators.

The balance is achieved by a presetting with memory lock.

The required values of presetting can be obtained from the flow charts. Presetting is carried out by using a presetting key (“Hycocon ETZ”: item no. 1183961 / “Hycocon HTZ”: item no. 1068585).

The Oventrop regulating valves have two integrated pressure test points and drain valves which may be equipped with a fill and drain tool with hose connection or measuring needles for the measurement of the differential pressure.

The regulating valves may be installed in either the supply or the return pipe.

The pipework has to be flushed thoroughly before installing the valve. The installation of an Oventrop “Y” type strainer is recommended.

During the construction period, the valve may be operated with the screw cap. The screw cap may not be used for a permanent closure of the valve. A metal cap has to be fitted to the connection nipple at the outlet port of the valve.

The flow charts are valid for installation of the regulating valves in the supply or the return pipe, provided the direction of flow conforms to the arrow on the valve body.

In cooling systems using mixtures of water and glycol, the correction factors related to the indicated chart values have to be taken into consideration. When using the flow-meter “OV-DMC 2” (kv-value method), the percentage of the water and glycol mixture has to be entered. The conversion is carried out by the computer. The universal bonnet connection (M 30 x 1.5) does not only allow a conversion of the regulating valves to thermostatic operation (e.g. “Uni XH”) but it may also be equipped with an electrothermal or electromotive actuator. Bus application electromotive actuators (“Uni EIB/LON”) may also be used.

Conversion of the regulating valves “Hycocon HTZ” to differential pressure regulators is possible without draining the system.

Flow charts and performance data for “Hycocon ETZ” DN 15 – DN 25 (k_{vs} 0.9)

with valve insert “Series AV 6”

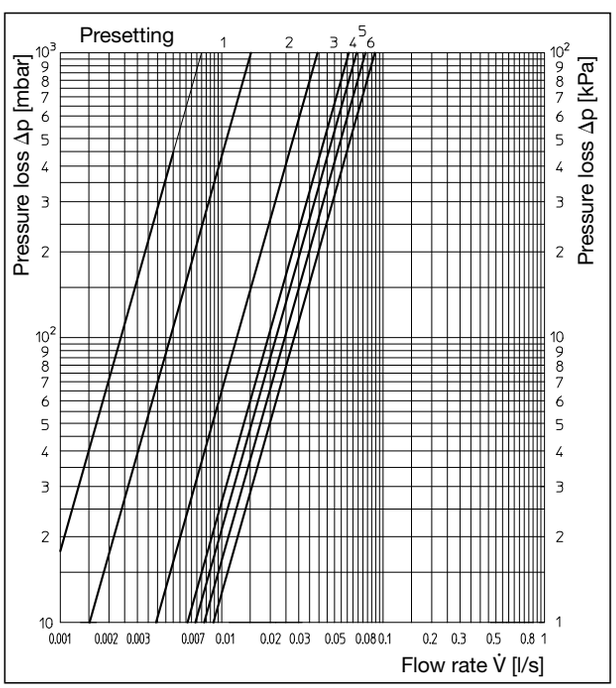

All patterns and sizes up to **1 K** P-deviation

Presetting	1	2	3	4	5	6
k_V-value at 1 K P-deviation	0.055	0.141	0.221	0.247	0.28	0.32
k_V-value at 1.5 K P-deviation	0.055	0.170	0.296	0.370	0.42	0.49
k_V-value at 2 K P-deviation	0.055	0.170	0.313	0.446	0.56	0.65
k_{vs}	0.06	0.17	0.36	0.56	0.8	0.9

Performance data (k_{vs} 0.9)

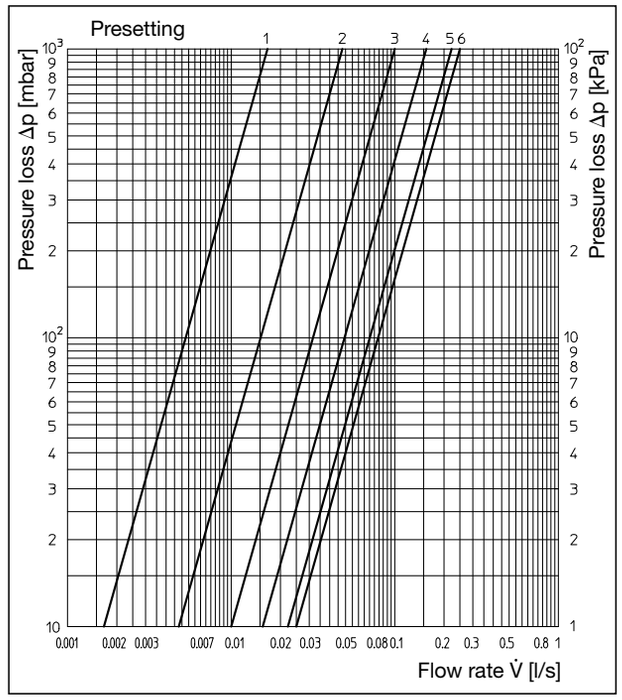

All patterns and sizes, k_{vs} values

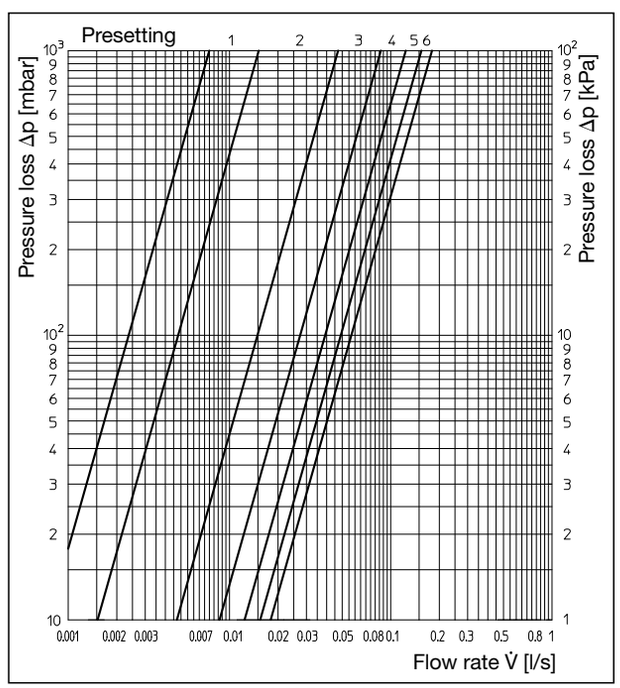

All patterns and sizes up to **2 K** P-deviation

Regulating valves “Hycocon ETZ” and “Hycocon HTZ” with female thread according to EN 10226 (BS 21)
“eco” measuring technique

Tender specification:

Regulating valve PN 16 for hot water central heating and cooling systems. Straight pattern model with presetting; valve body made of brass resistant to de-zincification (DZR), maintenance-free stem seal due to double O-ring, all functional components in one plane, with two integrated pressure test points, drain valves and caps, installation in the supply or the return pipe.
Connection thread M 30 x 1.5. Suitable for the connection of thermostats (e.g. “Uni XH”), actuators (e.g. electromotive actuators “Uni EIB/LON”). Bonnet (DN 15 – DN 25) replaceable with the help of the “Demo-Bloc” without draining the system.
Oventrop offers a separate insulation for temperatures up to 120 °C.

Regulating valves both ports with female thread according to EN 10226 (BS 21), with integrated pressure test points and drain valves (with captive caps)

Technical data:

Max. operating temperature t_s:	+120 °C	
Min. operating temperature t_s:	-10 °C	
Max. operating pressure p_S:	16 bar (PN 16)	
Max. differential pressure:	“Hycocon ETZ”:	1 bar
	“Hycocon HTZ” (bonnet pressure balanced):	
	DN 15 – DN 25:	5 bar
	DN 32:	3 bar
	DN 40:	2 bar
Effective piston stroke:	“Hycocon ETZ”:	2.5 mm
	“Hycocon HTZ”:	
	DN 15 – DN 25:	3 mm
	DN 32 + DN 40:	4 mm

Models:

“Hycocon ETZ”

Size		k_v **1 K** P	k_v **2 K** P	k_{vs}-Wert	Item no.
DN 15	Rp ½	0.32	0.65	0.9	1068364
DN 20	Rp ¾	0.32	0.65	0.9	1068366
DN 25	Rp 1	0.32	0.65	0.9	1068368
“Hycocon HTZ”					
DN 15	Rp ½	0.52	0.95	1.7	1068564
DN 20	Rp ¾	0.52	1.04	2.7	1068566
DN 25	Rp 1	0.52	1.08	3.6	1068568
DN 32	Rp 1¼	0.70	1.39	6.8	1068570
DN 40	Rp 1½	0.84	1.58	10.0	1068572

Accessory:
Fill and drain tool 1061791

Regulating valves “Hycocon ETZ” and “Hycocon HTZ” with male thread and collar nut
“eco” measuring technique

Tender specification:

Regulating valve PN 16 both ports with male thread and collar nut for weldable, solder and threaded tailpipes, flat sealing, not suitable for steam. Straight pattern model with presetting; body made of brass resistant to de-zincification (DZR) (1068667: bronze body). Maintenance-free stem seal due to double O-ring, all functional components in one plane, with two integrated pressure test points, drain valves and caps, installation in the supply or the return pipe.
Connection thread M 30 x 1.5. Suitable for the connection of thermostats (e.g. “Uni XH”), actuators (e.g. electromotive actuators “Uni EIB/LON”). Bonnet (DN 15 – DN 25) replaceable with the help of the “Demo-Bloc” without draining the system.
Oventrop offers a separate insulation for temperatures up to 120 °C (except for item no. 1068667).

Regulating valves both ports with male thread and collar nut, with integrated pressure test points and drain valves (with captive caps)

Technical data:

Max. operating temperature t_s:	+120 °C	
Min. operating temperature t_s:	-10 °C	
Max. operating pressure p_S:	16 bar (PN 16)	
Max. differential pressure:	“Hycocon ETZ”:	1 bar
	“Hycocon HTZ” (bonnet pressure balanced):	
	DN 15 – DN 25:	5 bar
	DN 32:	3 bar
	DN 40:	2 bar
Effective piston stroke:	“Hycocon ETZ”:	2.2 mm
	“Hycocon HTZ”:	
	DN 15 – DN 25:	3 mm
	DN 32 + DN 40:	4 mm

“Hycocon ETZ”

Size		k_v **1 K** P	k_v **2 K** P	k_{vs}-value	Item no.
DN 15	½"	0.32	0,65	0.9	1068464
DN 20	¾"	0.32	0,65	0.9	1068466
DN 25	1"	0.32	0,65	0.9	1068468
„Hycocon HTZ“					
DN 15	½"	0.52	0.95	1.7	1068664
DN 20	¾"	0.52	1.04	2.7	1068666
DN 20	¾"	0.63	1.30	5.0	1068667
DN 25	1"	0.52	1.08	3.6	1068668
DN 32	1¼"	0.70	1.39	6.8	1068670
DN 40	1½"	0.84	1.58	10.0	1068672

Accessory:
Fill and drain tool 1061791

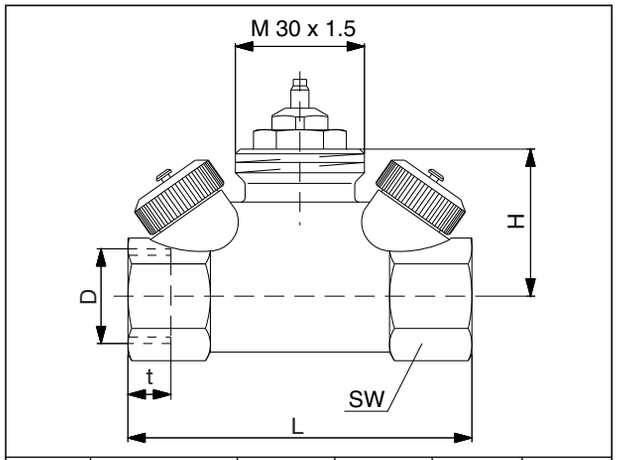

DN	D EN 10226	t	SW*	L	H
15	Rp ½	13.2	27	80	33
20	Rp ¾	14.5	32	82	35
25	Rp 1	16.8	41	92	37
32	Rp 1¼	19.1	50	115	48
40	Rp 1½	19.1	55	130	55

Dimensions *SW = spanner size

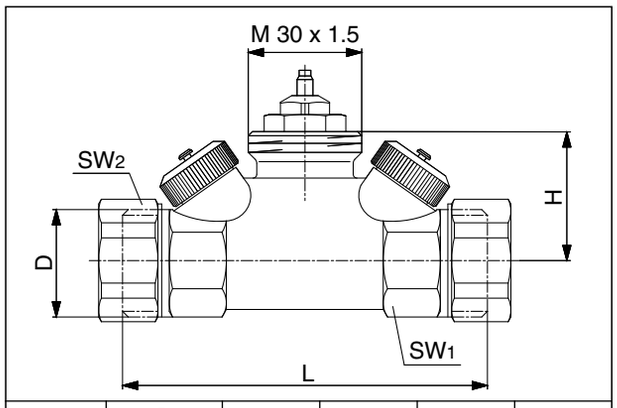

DN	D ISO 228	L	H	SW_1*	SW_2*
15	G ¾	95	33	27	30
20	G 1	98	35	32	37
25	G 1¼	105	37	41	46
32	G 1½	129	48	50	52
40	G 1¾	145	55	55	58

Dimensions *SW = spanner size

DN	D ISO 228	L	H	SW_1*	SW_2*
20	G 1	106	42	32	37

Dimensions “Hycocon HTZ” DN 20 k_{vs}-value 5.0, item no. 1068667

Flow charts for “Hycocon HTZ”
DN 15 item no. 1068564/1068664

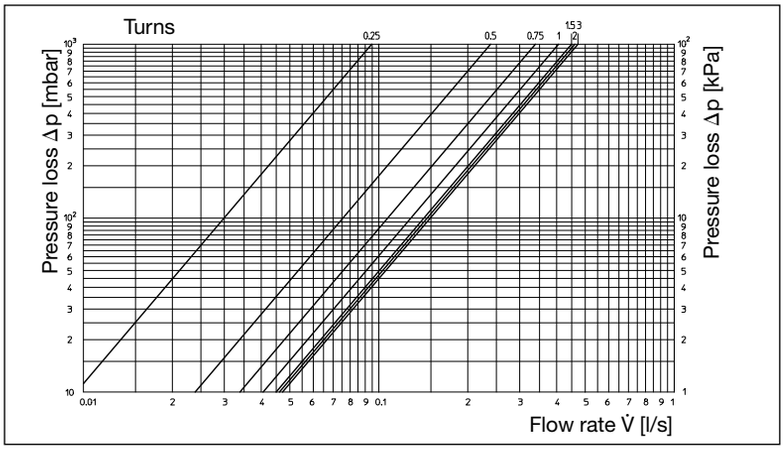

DN 20 (k_{VS} 2.7) item no. 1068566/1068666

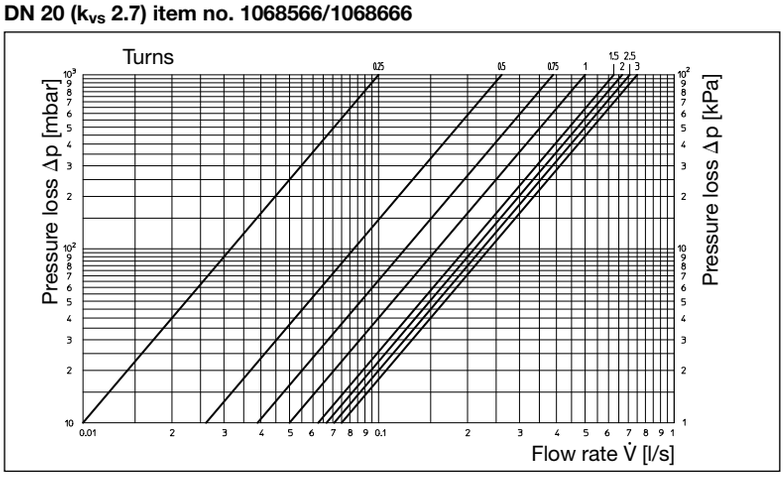

DN 25 item no. 1068568/1068668

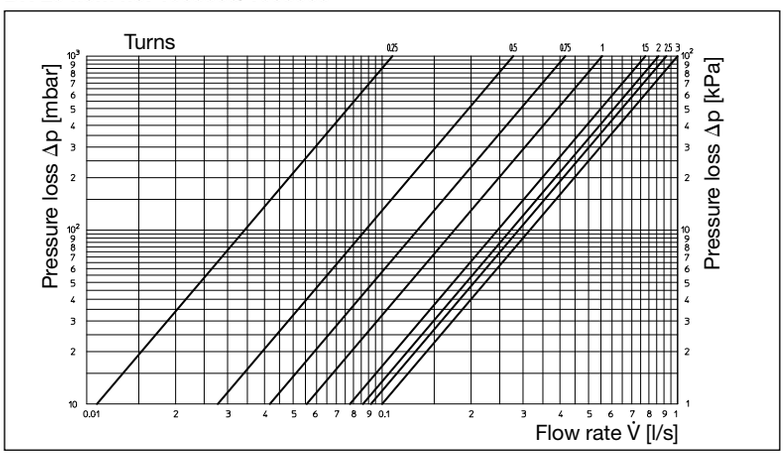

DN 32 item no. 1068570/1068670

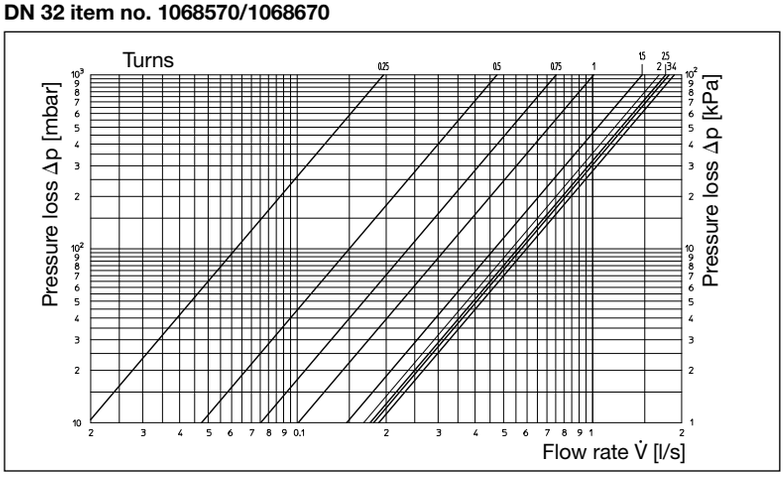

DN 40 item no. 1068572/1068672

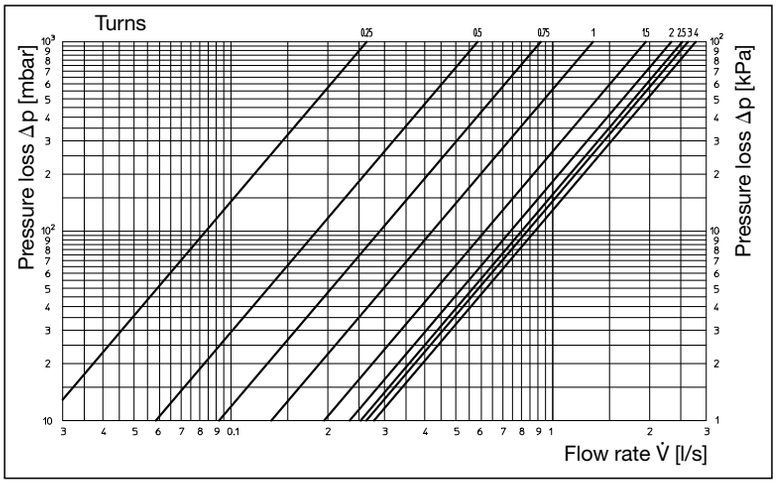

DN 20 (k_{VS} 5.0) item no. 1068667

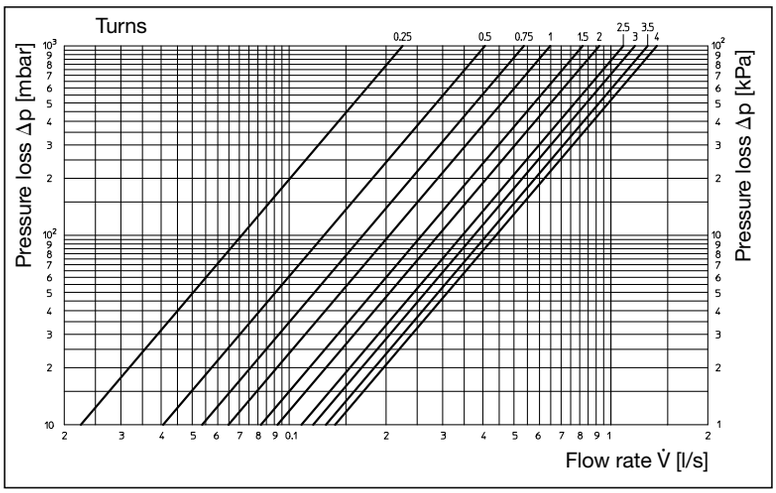

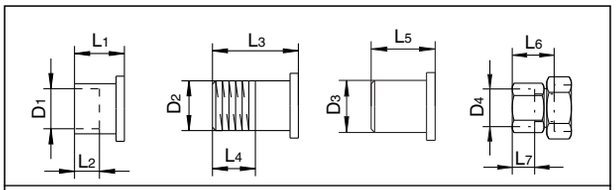

DN	D_1	L_1	L_2	D_2 DIN EN 10226	L_3	L_4	D_3	L_5	D_4 DIN EN 10226	L_6	L_7
15	15	18	12	R ½	31	13.2	20.5	50	Rp ½	37	13.2
20	18	23	15	R ¾	34	14.5	26	50	Rp ¾	38	14.5
20	22	24	17	–	–	–	–	–	–	–	–
25	28	27	20	R 1	40	16.8	33	60	Rp 1	53	16.8
32	35	32	25	R 1¼	46	19.1	41	60	Rp 1¼	55	19.1
40	42	37	29	R 1½	49	19.1	47.5	65	–	–	–

Dimensions

Tailpipe sets:

2 weldable tailpipes		Item no.
for valve DN 15		1060592
for valve DN 20		1060593
for valve DN 25		1060594
for valve DN 32		1060595
for valve DN 40		1060596
2 solder tailpipes		
15 mm	for valve DN 15	1061092
18 mm	for valve DN 20	1061093
22 mm	for valve DN 20	1061094
28 mm	for valve DN 25	1061095
35 mm	for valve DN 32	1061096
42 mm	for valve DN 40	1061097
2 tailpipes with male thread		
R ½	for valve DN 15	1061492
R ¾	for valveDN 20	1061493
R 1	for valve DN 25	1061494
R 1¼	for valve DN 32	1061495
R 1½	for valve DN 40	1061496
2 tailpipes with female thread		
Rp ½	for valve DN 15	1061392
Rp ¾	for valve DN 20	1061393
Rp 1	for valve DN 25	1061394
Rp 1¼	for valve DN 32	1061395

Valve inserts suitable for “Hycocon” valves
Sizes DN 15 – DN 25
(except for item o. 1068667)

k_v- and Zeta-values

		Item no.
	“Series A”	1187069
	“Series F”	1187352
	“Series ADV 6”	1186001
	“Series PTB” P1	1186052
	P2	1186053
	P3	1186054
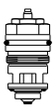	“Series KTB” for chilled water circuits	1147169
	with stainless steel seat (especially for steam installations)	1186200
	“Series AZ”	1187060
	Special insert for reversed supply and return pipe	1187070
	Return temperature limitation	1026981

Size	k_v at P-deviation 1 K	2 K	3 K	k_{vs}	Zeta at P-deviation 1K	2K	3 K	open
DN 15	0.50	0.95	1.25	1.35	404	112	65	55
DN 20	0.50	0.95	1.25	1.35	1343	372	215	184
DN 25	0.50	0.95	1.25	1.35	3380	935	540	463

“Series A”

Size	k_v at P-deviation 1 K	2 K	3 K	k_{vs}	Zeta at P-deviation 1K	2K	3 K	open
DN 15	0.20	0.32	0.35	0.37	2570	1004	839	751
DN 20	0.20	0.32	0.35	0.37	8535	3330	2790	2490
DN 25	0.20	0.32	0.35	0.37	21100	8240	6890	6166

“Series F” (with fine presetting)

Size	k_v at P-deviation 1 K	2 K	3 K	Zeta at P-deviation 1K	2K	3 K
DN 15	0.32	0.65	0.8	1004	239	158
DN 20	0.32	0.65	0.8	3330	795	525
DN 25	0.32	0.65	0.8	8240	2000	1320

“Series ADV 6” (with double function and presetting)

Size	k_{vs}	Zeta
DN 15 “P 1”	0.45	499
DN 15 “P 2”	1.00	101
DN 15 “P 3”	1.8	31
DN 20 “P 1”	0.45	1658
DN 20 “P 2”	1.00	335
DN 20 “P 3”	1.8	104
DN 25 “P 1”	0.45	4170
DN 25 “P 2”	1.00	844
DN 25 “P 3”	1.8	261

“Series PTB”

Size	k_v	Zeta
DN 15	0.5	150
DN 20	0.5	404
DN 25	0.5	1340

“Series KTB” k_{vs} = 1.0

Size	k_{vs}	Zeta
DN 15	1.8	31
DN 20	2.8	43
DN 25	3.5	69

“Series AZ” (for zone control), all patterns k_v = 1.1

Zeta values related to the inner pipe diameter according to EN 10255

	Item no.
“Combi LR” with cap	1187071
for “Hycocon ETZ” (“Series AV 6”)	1187057
for “Hycocon HTZ” DN 15 - DN 25	1067085
for “Hycocon VTZ/VPZ” and “Hycocon ATZ/APZ” DN 15 - DN 25	1067065
Sizes DN 32 and DN 40	
for “Hycocon VTZ/VPZ” and “Hycocon HTZ”	
DN 32	1067066
DN 40	1067067
for “Hycocon ATZ/APZ”	
DN 32	1067068
DN 40	1067069
Measuring and draining unit DN 15- DN 40	1061790
Plug DN 15 - DN 40	1061798

Size	k_v at P-deviation			k_{vs}	Zeta at P-deviation			
	1 K	2 K	3 K		1K	2K	3 K	open
DN 15	0.32	0.65	0.8	0.9	1004	239	158	125
DN 20	0.32	0.65	0.8	0.9	3330	795	525	414
DN 25	0.32	0.65	0.8	0.9	8240	2000	1320	1042

“Series AV 6”

Insulation:

1. Type I for use in heating systems up to 80°C.
   This insulation made of expanded polystyrene (EPS) also serves as packaging ad is supplied with each double regulating and commissioning valve (or isolating and orifice valve) together with the corresponding clamping rings. The handwheel and the presetting scale remain accessible.
2. Type II (item no. 1061771-75) for use in heating systems up to 120 °C.
   High quality insulation made of polyurethane (PUR) as accessory, consisting of 2 shells held together by clamping rings (dimensions as type I). The handwheel and the presetting scale remain accessible.
3. Type III (item no. 1061781-85) for use in cooling systems for a diffusion tight insulation in combination with type I or II. This accessory consists of two shells made of polystyrene (PS) integrating the insulation type I or II. Here, the handwheel and the presetting scale are insulated, too. To improve the insulation, the shells may be cohered by using a sealing material.

The insulations cannot be used for item no. 1068667.

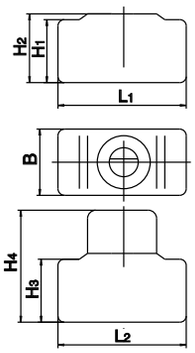

DN	H_1	H_2	H_3	H_4	L_1	L_2	B
15	82	89	87	93	155	160	76
20	82	89	87	93	155	160	76
25	88	95	93	100	155	160	84
32	94	108	99	122	178	183	96
40	104	120	110	130	197	203	110
50	131	143	–	–	211	–	143

Correction factor for mixtures of water and glycol:

When antifreeze liquids are added to the heating water, the values given in the chart must be multiplied by the correction factor f.

When using the flow-meter “OV-DMC 2”, the correction factor is converted automatically. To do so, the temperature of the mixture of water and glycol has to be entered and the percentage of glycol is selected in the flow-meter.

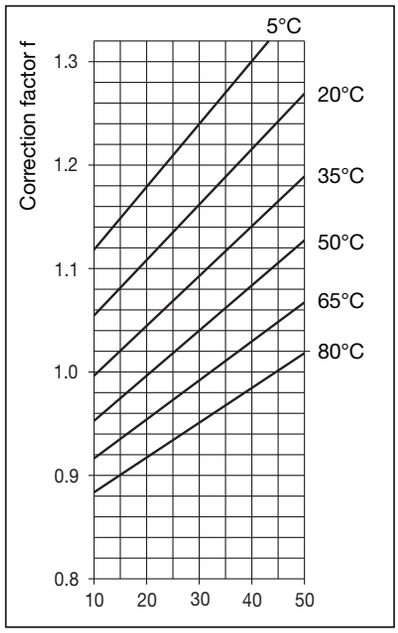

Weight proportion of ethylene glycol [%]

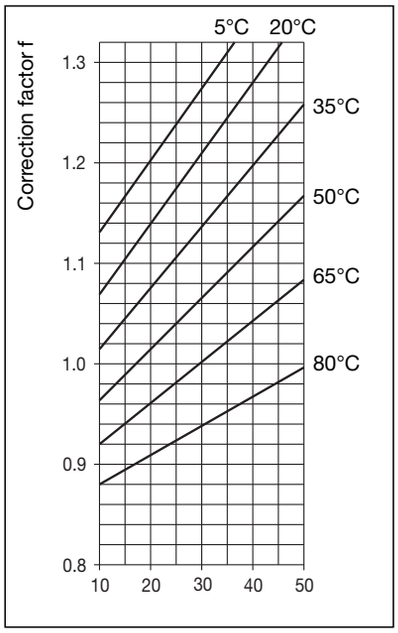

Weight proportion of propylene glycol [%]

Measuring and regulation

Oventrop measuring system “OV-DMC 2” (with memory and microprocessor)

featuring numerous functions and a wide range of applications:

- Flow rate indication (indication in m³/h, l/s, l/min, gal/min)
- differential pressure measuring (indication in mbar, kPa, PSI, mm WG, m WG)
- Temperature measuring (indication in °C or °F)
- Presetting: Arriving at the value of presetting based on the measured differential pressure, the given flow rate and the valve size

The characteristic lines of all Oventrop regulating valves are memorised in the flow-meter.

With the use of a respective kv value, it is possible to carry out measurements on valves of other manufacturers.

(For practical use of the “OV-DMC 2”, special operating instructions are available.)

Oventrop measuring system “OV-DMPC”

consisting of differential pressure transmitter “DMPC-sensor” with USB interface and software including accessories. The measuring system is connected to a commercial computer (not included).

Subject to technical modification without notice.

Product range 3
ti 128-EN/20/MW
Edition 2015

OVENTROP GmbH & Co. KG
Paul-Oventrop-Straße 1
D-59939 Olsberg, Germany
Phone +49 (0) 29 62 82-0
Fax +49 (0) 29 62 82-450
E-Mail mail@oventrop.de
Internet www.oventrop.com

For an overview of our global presence visit www.oventrop.de